Coaxial D-SUB 8W8 FEMALE Solder Cup

ROHS COMPLIANT

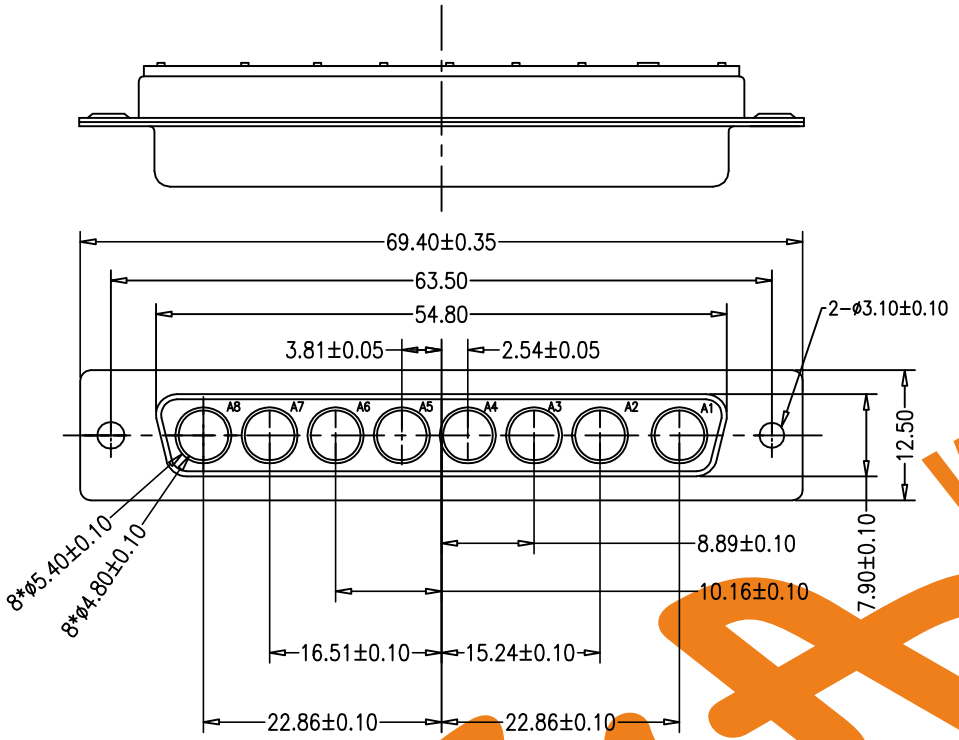

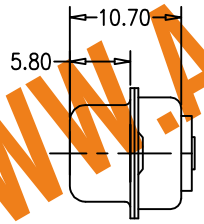

ELECTRICAL CHARACTERISTICS:

Dielectric withstanding Voltage: AC 1000V r.m.s.
Insulation Resistance: 500 Megohms Minimum at DC 500V
Contact Resistance: 25 Milliohms
Operating Temperature: -20℃～+85℃

MATERIALS:

Insulator: PBT,UL 94V-0 Rated
Shell: Cold Roller Steel

Ordering Code:

PDC8W8	-F	-G0	-B	-X	-00
①	②	③	④	⑤	⑥

① Series
② Contact Type:
M:Male F:Female
③ Contact NO.:
G0: Gold flash G1: 3u″ Gold
G2: 5u″ Gold G3: 10u″ Gold
G4: 15u″ Gold G5: 30u″ Gold
④ Insulation Color Code:
B:Black L:Blue
W:White
⑤ Mounting Option:
A: Through-hole
B: 2.55″Threaded insert
C: 6.80″Threaded rear spacer
D: 10.3″Threaded rear spacer PCB clip
E: 11.0″Threaded rear spacer PCB clip
F: 11.9″Threaded rear spacer PCB clip
⑥ Series

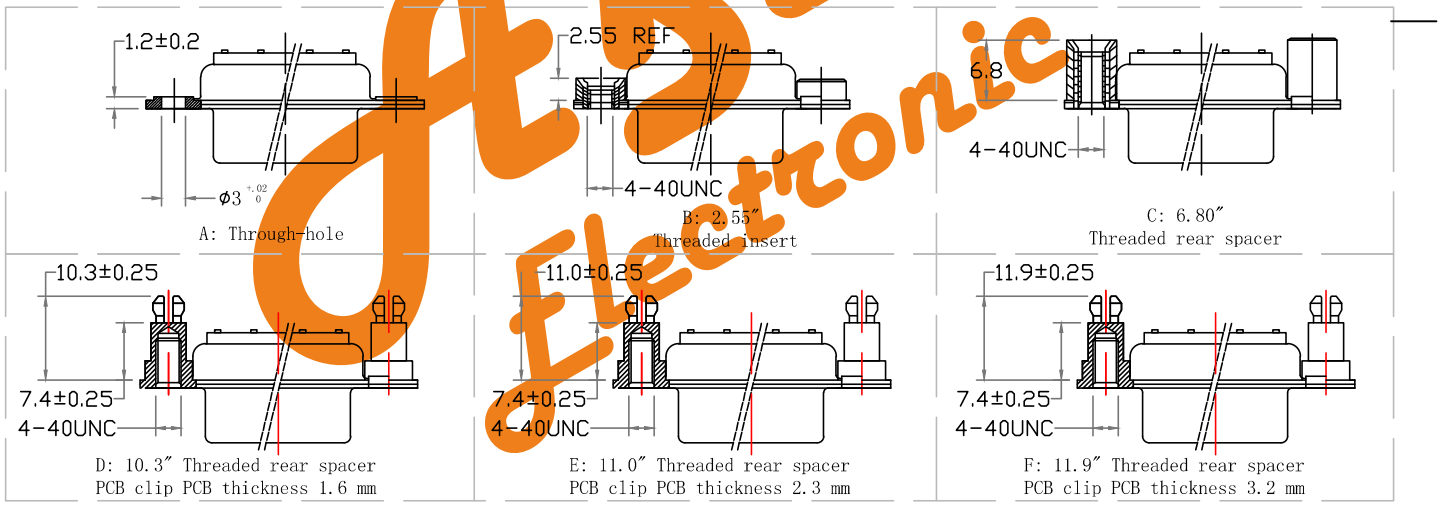

Unless Otherwise specified tolerance
X.±0.35
X.X:±0.25
X.XX:±0.20
X.XXX:±0.15

SCALE: 1:1 | UNIT: mm

DRAWN: junfon H
CHECKED: YANG

3rd ANGLE PROJECTION

WWW.AsA-Elec.com
AsA Electronic Co.
Tel : (+98) 21 66 73 56 82 Mob : (+98) 912 03 161 02

TITLE: Coaxial D-SUB 8W8 FEMALE Solder Cup

DRAWING NO: PDC8W8-FXXXX00
PRODUCT NO: PDC8W8-FXXXX00

REV	DESCRIPTION	DATE
	Add option of plating	12/7/17

WWW.AsA-Elec.com
AsA Electronic